Progress at the Paducah Project

DOE Portsmouth/Paducah Project Office

Update to the Paducah Citizens Advisory Board

August 17, 2006

C-402 Limehouse Demolition

Inactive Facilities D&D

- 402 Limehouse demolition completed
  - Rubble removal to be completed by August 18
- Completed sampling activities in C-405 Incinerator
  - Work instructions being written; waiting for approval of RAWP for work to start
- Sampling in C-746-A West End Smelter scheduled to start by week of August 21

DOE Material Storage Areas

DMSA materials are loaded into a container for shipment

- On target to meet 9/30/06 milestone to complete characterization of "B" Priority DMSAs
  - 10 of 11 completed
- 73 of 160 original DMSAs now characterized

DMSA Characterization

DMSA Disposition

C-400 Interim Remedial Action

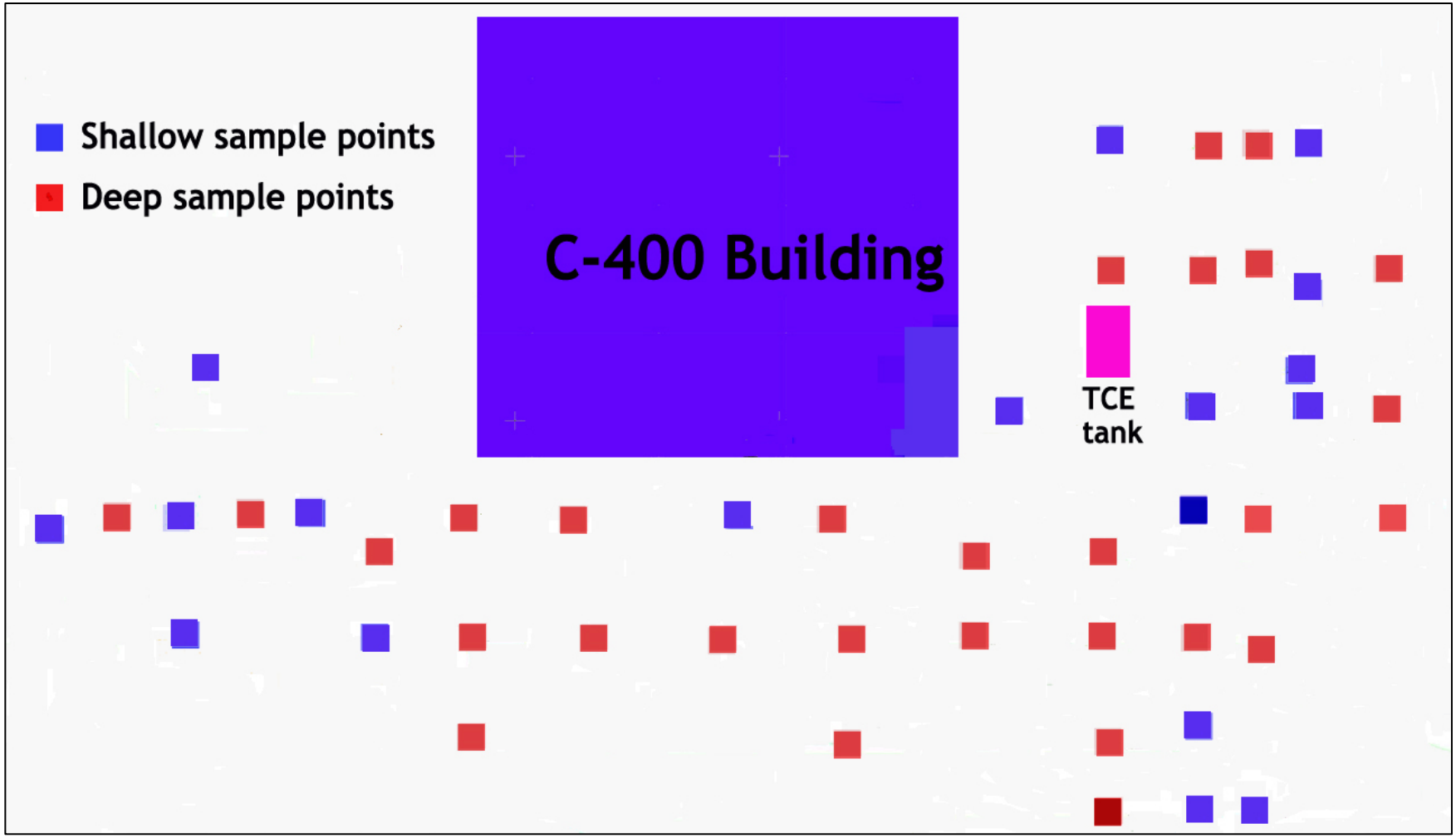

- **Remedial Design Support Investigation sampling at 47 locations**
  - **18 samples to 55 feet**
  - **29 samples to 95-105 feet**

C-400 Interim Remedial Action

- Results will supplement data from earlier investigations
- Results will more precisely define TCE location and concentrations around the C-400 Building
- Final design of direct heating system will utilize investigation results
- Sampling completed by July 31 at 26 locations

C-400 Interim Remedial Action

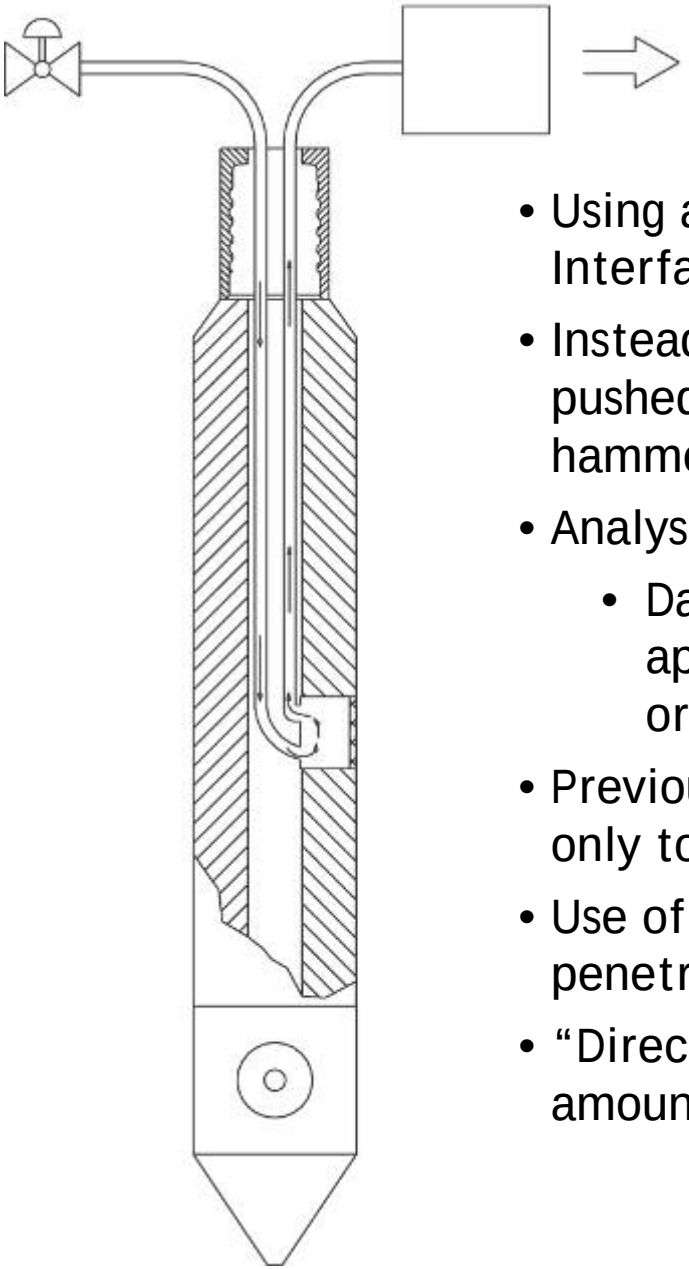

- Using a device called a Membrane Interface Probe
- Instead of drilling, the probe is pushed to depth using a hydraulic hammer
- Analysis is performed every foot
  - Data provides information on approximate level of volatile organic compounds (TCE)
- Previously used at Paducah, but only to about 50 feet
- Use of a "pre-probe" allows for penetration from 50 to 100 feet
- "Direct push" technology reduces amount of waste

The Membrane Interface Probe

DUF6 Conversion Project

A panoramic view of the construction taken August 10

- Conversion Building concrete panels 40% complete with installation; projected completion by October 2006
- Warehouse building complete
- Continuing to finish interior of Administration Building; projected completion by October 2006
- Began construction of rail spur; projected completion by October 2006
- Bayou Creek rail bridge connected to site rail line

DUF6 Conversion Project

A concrete panel is lowered into place on August 10 in the Conversion Building

A worker drives spikes on the rail spur now under construction

Northwest Corner Scrap Metal Removal

- Project nearing completion
  - ~200 tons remain on the ground
  - Nearly 60 railcars loaded with more than 4,000 tons pending shipment
  - More than 23,000 tons shipped to date

Northwest Corner Scrap Metal Removal

Scrapyard Status – August 2006

Northwest scrapyards

A-Yard	E-Yard	C-Yard
100% finished	100% finished	100% finished
119 tons removed	6,005 tons removed	2,680 tons removed

P1-Yard	P-Yard	E1-Yard	C1-Yard
100% finished	100% finished	99% finished	94% finished
1,928 tons removed	2,216 tons removed	4,618 tons removed	2,642 tons removed
		~20 tons remaining	~180 tons remaining

Classified Scrapyard
(includes aluminum ingots)

D-Yard
100% finished
7,038 tons removed

C-410/420 D&D

- Began removal of utility piping
- Completed bussbar removal (Zones 42 and 43 of Sector 2)
- Completed removal and shipment of 108 electrical switches to ToxCo for reuse
- Disposed of 20 intermodals of debris
- Packaged 19 intermodals with debris

Workers remove piping inside C-410

Legacy Waste Disposition

100-pound drums of asbestos waste are loaded into a container for shipment to Bear Creek for supercompacting prior to disposal.

- Continued disposal of ~30,500 ft^3 of Low-Level waste stored outdoors
  - To date, ~20% disposed and another ~35% repackaged awaiting disposal
- In July, disposed of ~3,500 ft^3 of wastes, including:
  - Mixed Low-Level to Energy*Solutions*
  - Mixed Low-Level to TSCA Incinerator
  - Legacy waste materials to C-746-U Landfill and Energy*Solutions*

C-746-U Landfill Leachate Treatment System

- For solids treatment, there are two parallel filter trains each with two filters in series
- For Volatile Organic Compound, leachate is filtered through two 55-gallon canisters each containing 180 pounds of granular activated carbon
  - Filters operate in series or parallel mode
- Incidental building and system solid waste disposed in C-746-U Landfill
- Filters will be sampled and analyzed prior to disposal

The leachate treatment system is shown above; at right, the building housing the system

Environmental Projects

Groundwater Operable Unit

- D2 Southwest Plume Site Investigation Report under regulatory review
- Discussions on the use of degradation factors used in groundwater modeling continue between DOE, Kentucky and EPA
- Completing D1 Proposed Remedial Action Plan for the Southwest Groundwater Plume Sources; scheduled for submission on 9/14/06

Surface Water Operable Unit

- Requesting milestone extension for submission of the Site Investigation/Risk Assessment to Kentucky and EPA

Burial Grounds Operable Unit

- The D2 Remedial Investigation/Feasibility Study Work Plan is scheduled for submission to Kentucky and EPA by August 29
  - Fieldwork scheduled to begin in October 2006

DOE Portsmouth/Paducah Project Office